Repair Parts

116.211.AB.1T

Touch-free, programmable faucet with above-deck electronics

CHICAGO FAUCETS
Geberit Group

HyTronic Base with Internal Mixer

Base Parts:

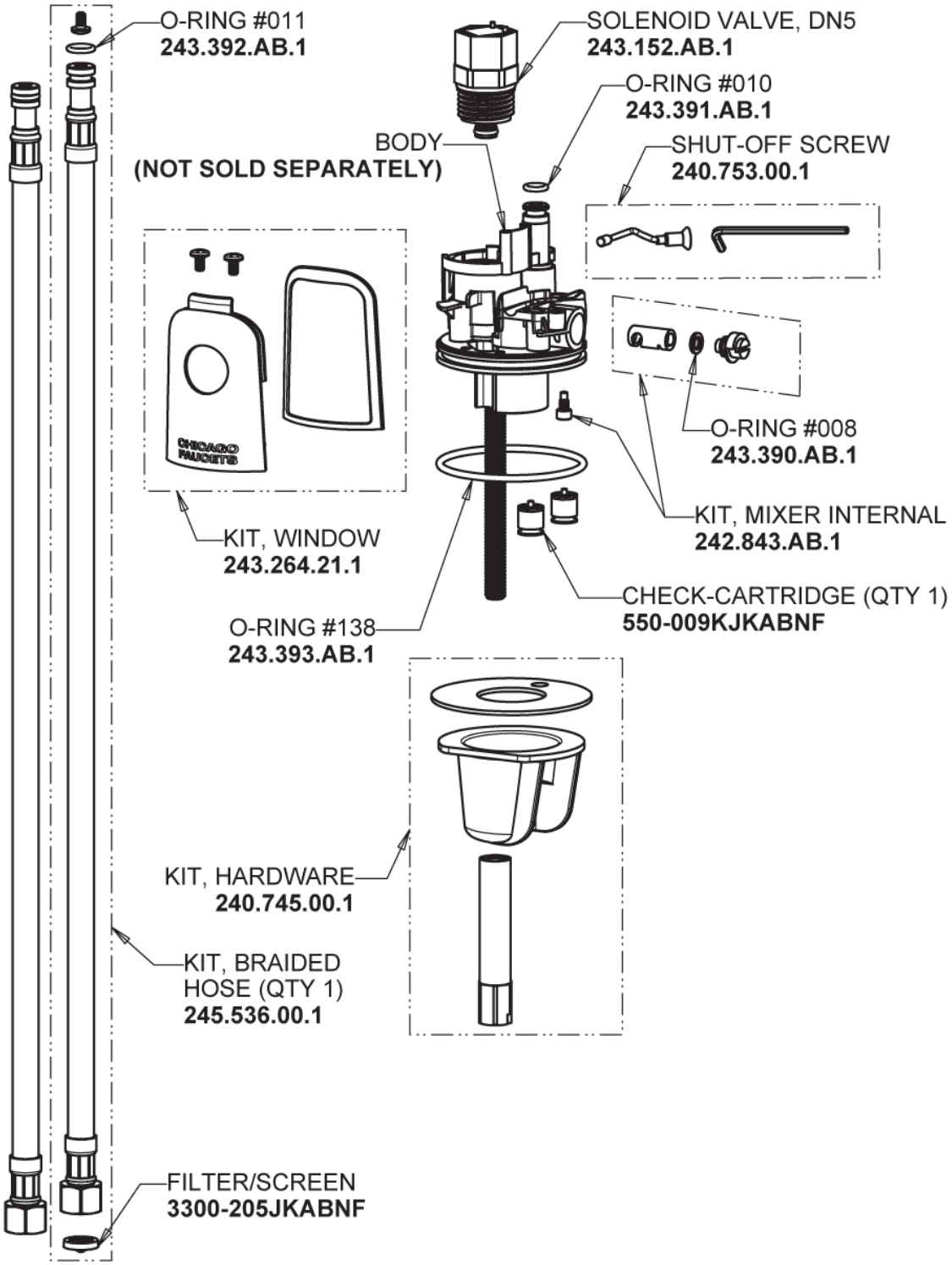

For Technical Assistance:

Phone: 800-TEC-TRUE (832-8783)

Email: techsupport.us@chicagofaucets.com

2100 South Clearwater Drive
Des Plaines, IL 60018
Phone: 847-803-5000
chicagofaucets.com

Repair Parts

116.211.AB.1T

Touch-free, programmable faucet with above-deck electronics

CHICAGO FAUCETS
Geberit Group

HyTronic Traditional Spout
240.724.AB.1

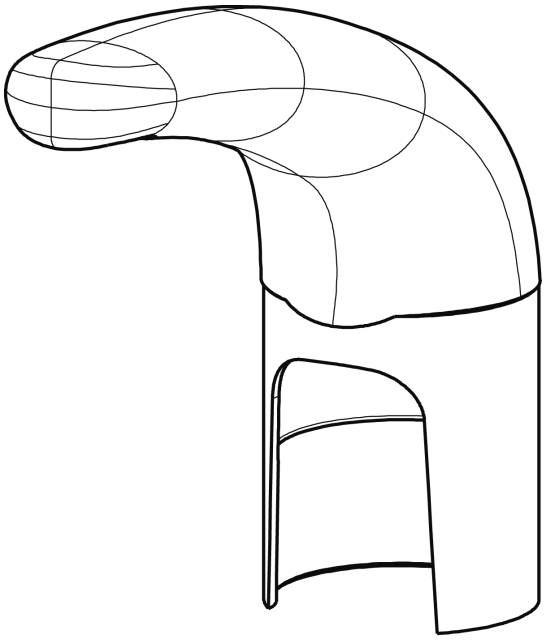

CHECK-CARTRIDGE
550-009KJKABNF

O-RING, #010
243.391.AB.1

Electronic Module
242.433.00.1T

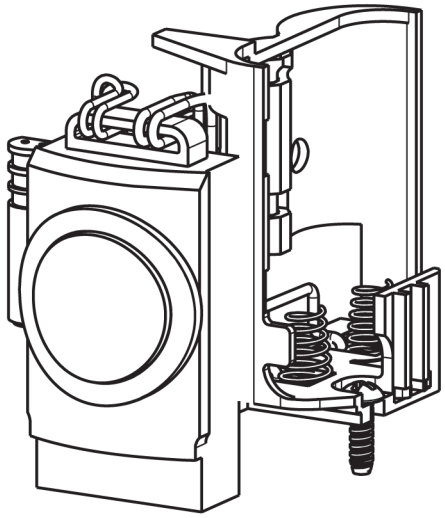

0.5 GPM (1.9 L/min) Vandal Proof Econo-Flo Non-Aerating Spray
E2805JKABCP

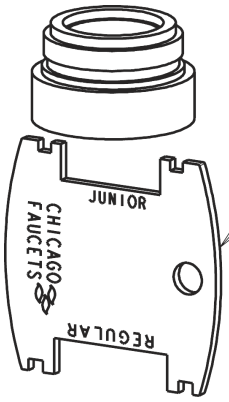

VANDAL PROOF KEY
3-024JKRCF

CR-P2 6V Lithium Battery
242.560.00.1

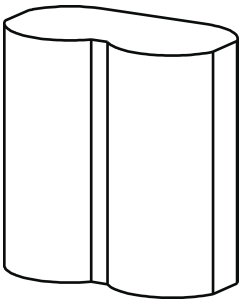

For Technical Assistance:

Phone: 800-TEC-TRUE (832-8783)
Email: techsupport.us@chicagofaucets.com

2100 South Clearwater Drive
Des Plaines, IL 60018
Phone: 847-803-5000
chicagofaucets.com