Repair Parts

116.204.AB.1T

Touch-free, programmable faucet with above-deck electronics

HyTronic Base for Wall, No Mixer

Base Parts:

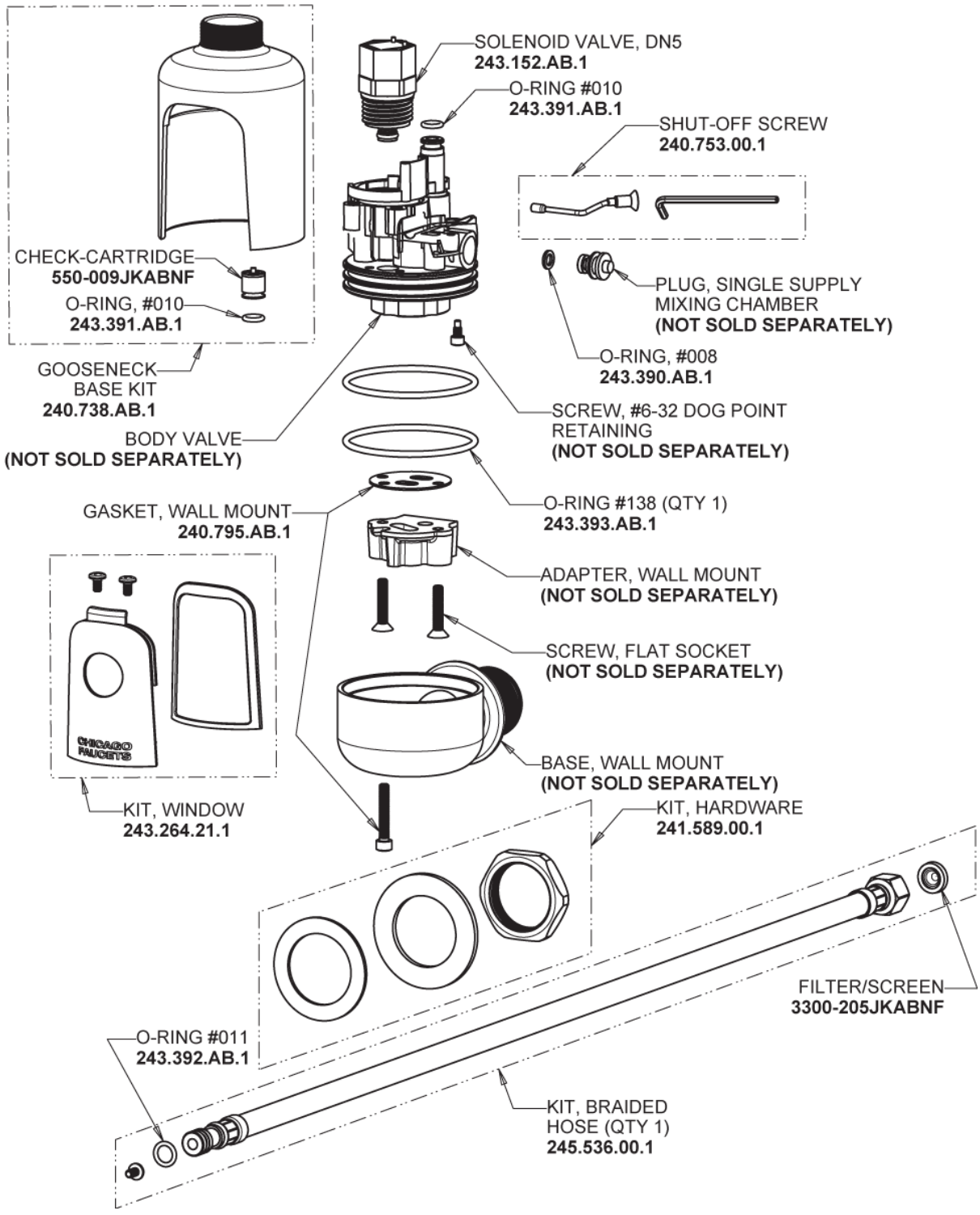

For Technical Assistance:

Phone: 800-TEC-TRUE (832-8783)

Email: techsupport.us@chicagofaucets.com

2100 South Clearwater Drive

Des Plaines, IL 60018

Phone: 847-803-5000

chicagofaucets.com

Repair Parts

116.204.AB.1T

Touch-free, programmable faucet with above-deck electronics

CHICAGO FAUCETS
Geberit Group

5-1/4" Rigid / Swing Gooseneck Spout
GN2AH8JKABCP

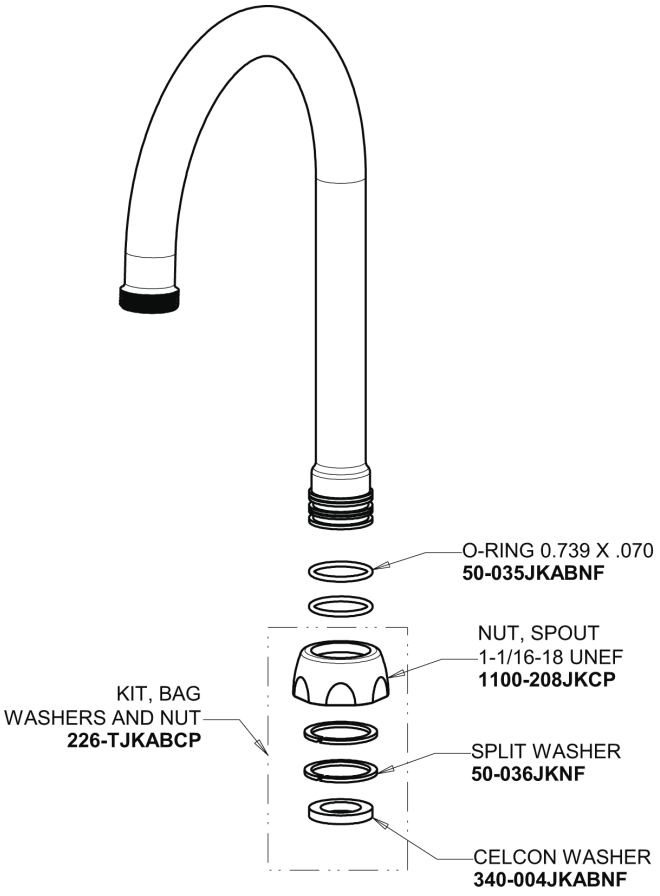

Electronic Module
242.433.00.1T

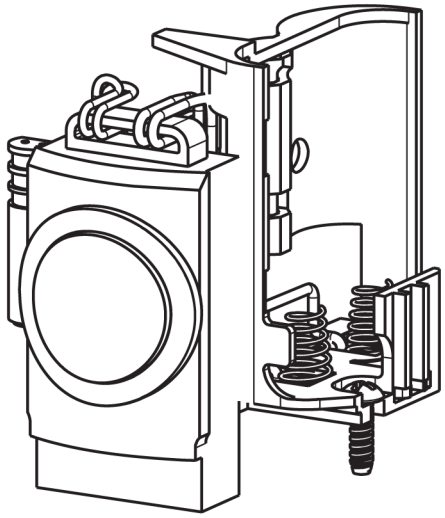

0.5 GPM (1.9 L/min) Vandal Proof Non-Aerating Spray Outlet
E2805-5JKABCP

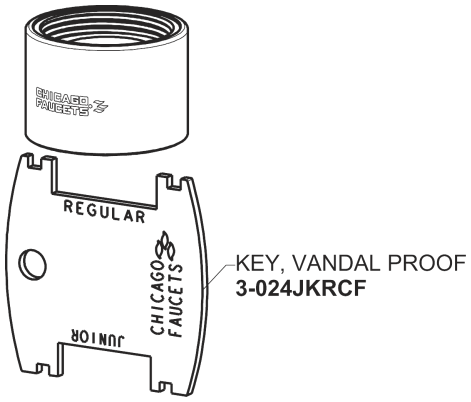

CR-P2 6V Lithium Battery
242.560.00.1

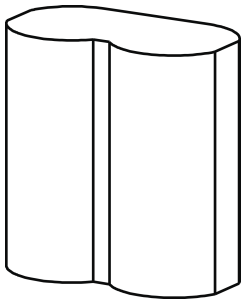

For Technical Assistance:

Phone: 800-TEC-TRUE (832-8783)
Email: techsupport.us@chicagofaucets.com

2100 South Clearwater Drive
Des Plaines, IL 60018
Phone: 847-803-5000
chicagofaucets.com