# Repair Parts

116.202.AB.1T

Touch-free, programmable faucet with above-deck electronics

HyTronic Base, No Mixer

## Base Parts:

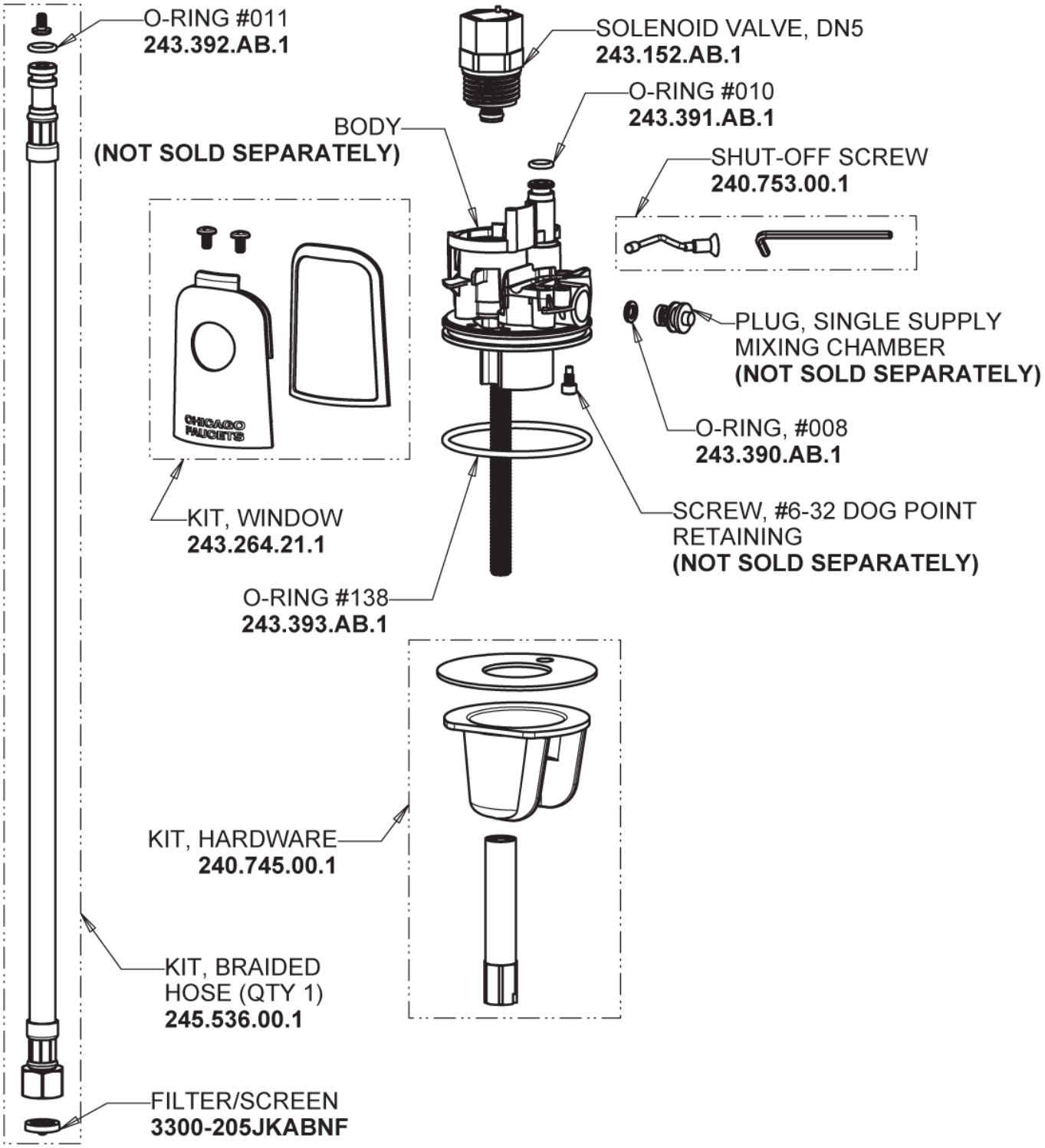


## For Technical Assistance:

Phone: 800-TEC-TRUE (832-8783)

Email: techsupport.us@chicagofaucets.com


2100 South Clearwater Drive

Des Plaines, IL 60018

Phone: 847-803-5000

chicagofaucets.com

# Repair Parts

116.202.AB.1T

Touch-free, programmable faucet with above-deck electronics

HyTronic Contemporary Spout
**240.729.AB.1**

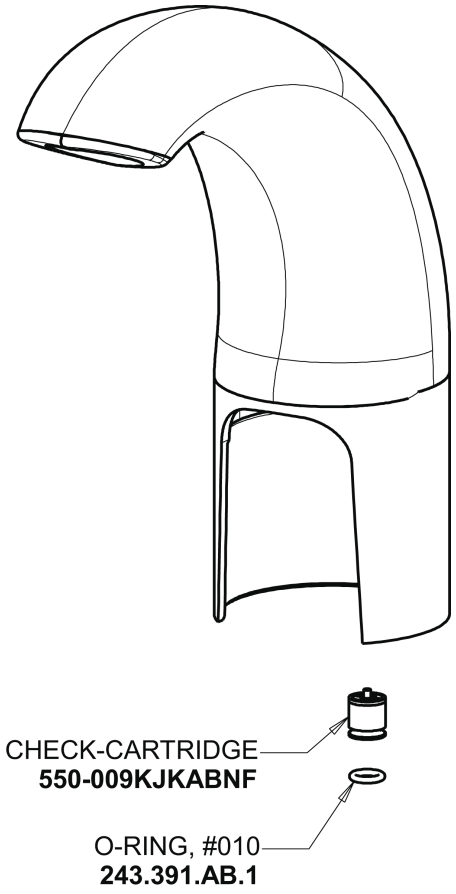


Electronic Module
**242.433.00.1T**

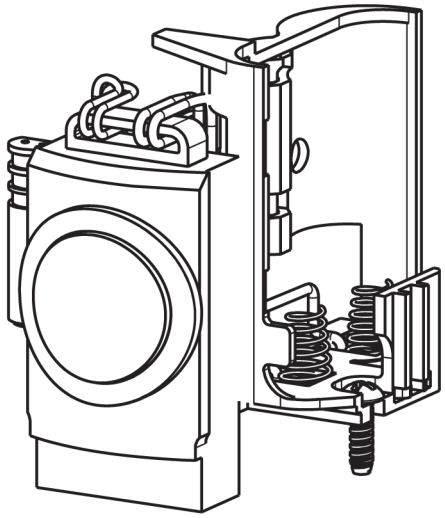

0.5 GPM (1.9 L/min) Vandal Proof Econo-Flo Non-Aerating Spray
**E2805JKABCP**

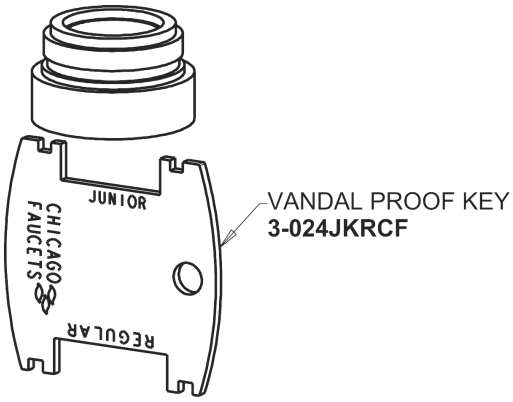


CR-P2 6V Lithium Battery
**242.560.00.1**

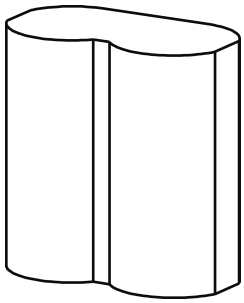

## For Technical Assistance:

Phone: 800-TEC-TRUE (832-8783)
Email: techsupport.us@chicagofaucets.com

2100 South Clearwater Drive
Des Plaines, IL 60018
Phone: 847-803-5000
chicagofaucets.com