Touchless Faucets
116.122.AB.1T

CHICAGO FAUCETS
Geberit Group

Product Type

Touch-free, programmable faucet with above-deck electronics

Features & Specifications

- Includes optional 1.5 GPM (5.7 L/min) insert
- Internal Antenna Specifications – Peak Gain of the antenna: –5.47 dBi – Frequency range: 2400–2500 MHz – FCC ID: 2APTX-CFC19
- 40 second run time with hand presence. Safety auto-timeout feature will shut the water off after 40 seconds. Reactivate faucet by removing hands from the sensor for at least 10 seconds.
- Built-in Bluetooth® technology allows for easy adjustments and mode changes using a smartphone or tablet with the Chicago Faucets CF Connect App.
- Single hole (4" and 8" deck plates available, see Accessories)
- HyTronic® Contemporary spout with user temp control
- Vandal Proof Pressure compensating Econo-Flo™ non-aerating laminar spray 0.5 GPM
- User temperature control handle kit, rounded
- HyTronic® module kit with Bluetooth® communication
- ECAST® design provides durable cast brass construction with total lead content equal to or less than 0.25% by weighted average
- Complies with the requirements of the Buy American Act of 1933.

Performance Specification

- Rated Operating Pressure: 20-125 PSI
- Rated Operating Temperature: 40-140°F

Warranty

- 3-Year Limited Electronics and Solenoid Warranty
- Lifetime Limited Faucet Warranty
- 1-Year Limited Finish Warranty
- 5-Year Limited Mechanical Warranty

Codes & Standards

- ASME A112.18.1/CSA B125.1
- ADA ANSI/ICC A117.1
- Complies with CALGreen requirements
- NSF/ANSI 372 Low Lead Content
- NSF/ANSI/CAN 61: Q ≤ 1

Job Name _____

Item Number _____

Section/Tag _____

Model Specified _____

Architect _____

Engineer _____

Contractor _____

[ ] Submitted as Shown [ ] Submitted with Variations

Date _____



ECAST

ECAST products are intended for installation where state laws and local codes mandate lead content levels or in any location where lead content is a concern.

2100 South Clearwater Drive
Des Plaines, IL
P: 847/803-5000
F: 847/803-5454
Technical: 800/TEC-TRUE
www.chicagofaucets.com

116.122.AB.1T

Architect/Engineer Specification

Chicago Faucets No. 116.122.AB.1T, HyTronic electronic faucet with dual-beam infrared sensor. Contemporary-style integral spout, chrome plated. Single-hole deck mount. 0.5 GPM (1.9 L/min) vandal-proof, pressure compensating, Econo-Flo, non-aerating spray. Includes optional 1.5 GPM (5.7 L/min) insert. Dual supply for hot and cold water service. 12-volt AC transformer required (order separately). Flexible supply hoses included. User-adjustable temperature control mixer. Multiple field-adjustable modes and ranges. Built-in Bluetooth® technology allows for easy adjustments and mode changes using a smartphone or tablet with the Chicago Faucets CF Connect App. ECAST® construction with less than 0.25% lead content by weighted average. CALGreen compliant. This product meets ADA ANSI/ICC A117.1 requirements and is tested and certified to industry standards: ASME A112.18.1/CSA B125.1, Certified to NSF/ANSI 61, Section 9, California Health and Safety Code 116875 (AB1953-2006), Vermont Bill S.152, NSF/ANSI 372 Low Lead Content, and California Green Building Standards Code (CALGreen).

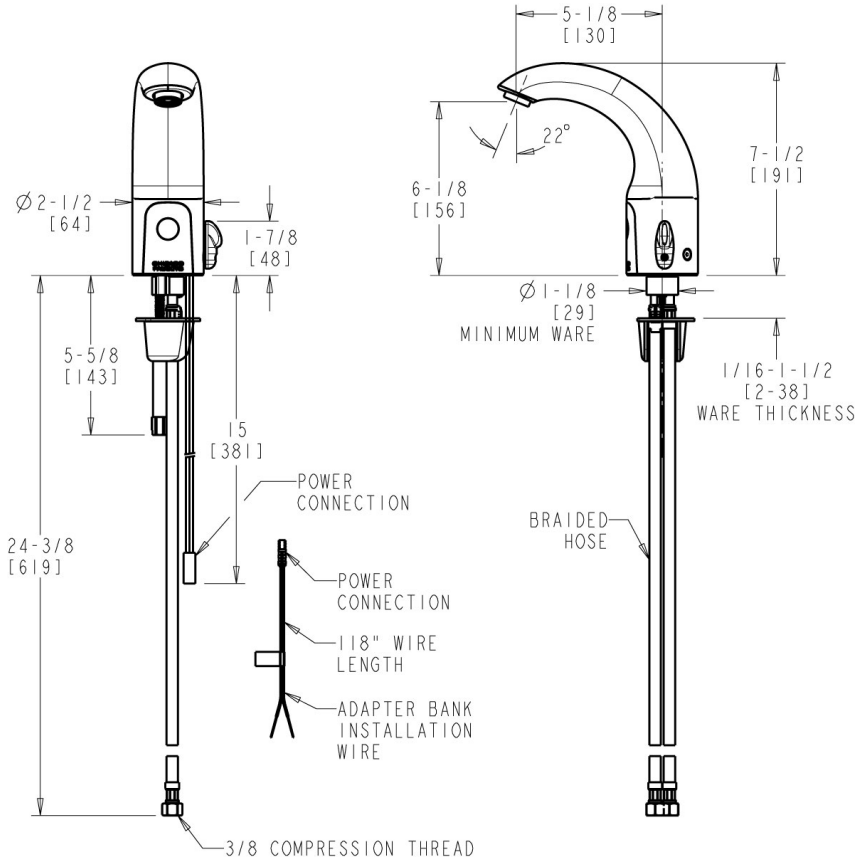

Operation and Maintenance

Installation should be in accordance with local plumbing codes. Flush all pipes thoroughly before installation. After installation, remove spout outlet or flow control and flush faucet thoroughly to clear any debris. Care should be taken when cleaning the product. Do not use abrasive cleaners, chemicals or solvents as they can result in surface damage. Use mild soap and warm water for cleaning and protecting the life of Chicago Faucet products. For specific operation and maintenance refer to the installation instructions and repair parts documents that are located at www.chicagofaucets.com.

Chicago Faucets, member of the Geberit Group, is the leading brand of commercial faucets and fittings in the United States, offering a complete range of products for schools, laboratories, hospitals, office buildings, food service, airports and sport facilities. Call 1.800.TECTRUE or 1.847.803.5000 Option 1 for installation or other technical assistance.

2100 South Clearwater Drive
Des Plaines, IL
P: 847/803-5000
F: 847/803-5454
Technical: 800/TEC-TRUE
www.chicagofaucets.com