Repair Parts

116.102.AB.1T

Touch-free, programmable faucet with above-deck electronics

HyTronic Base, No Mixer

Base Parts:

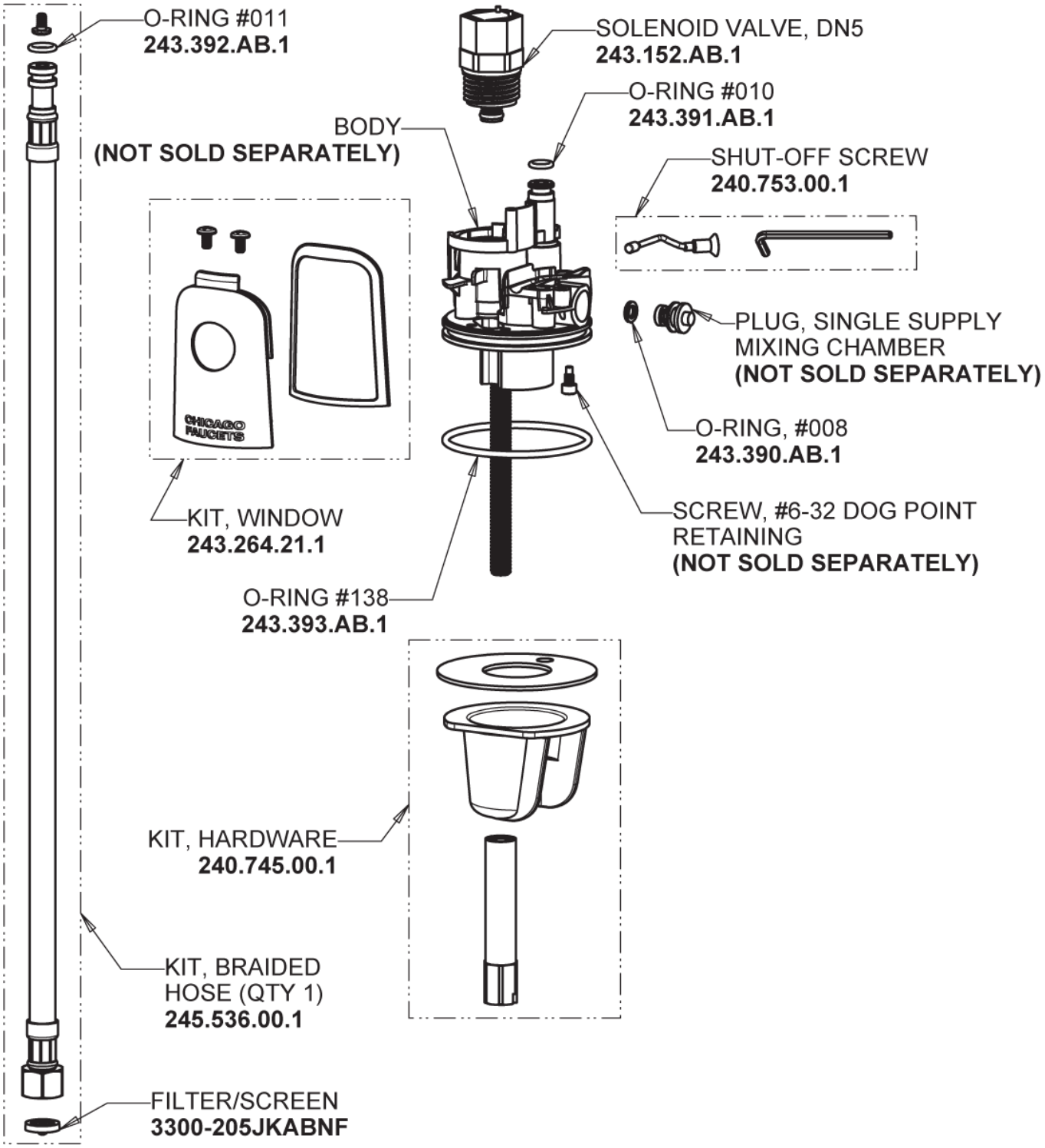

For Technical Assistance:

Phone: 800-TEC-TRUE (832-8783)

Email: techsupport.us@chicagofaucets.com

2100 South Clearwater Drive

Des Plaines, IL 60018

Phone: 847-803-5000

chicagofaucets.com

Repair Parts

116.102.AB.1T

Touch-free, programmable faucet with above-deck electronics

CHICAGO FAUCETS
Geberit Group

HyTronic Contemporary Spout
240.729.AB.1

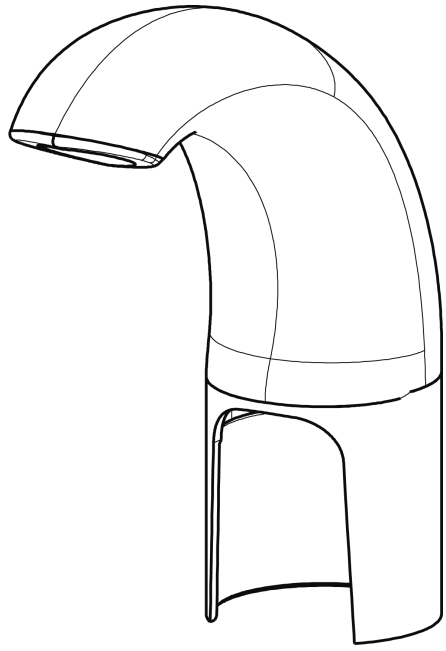



CHECK-CARTRIDGE
550-009KJKABNF

O-RING, #010
243.391.AB.1

Electronic Module
242.433.00.1T

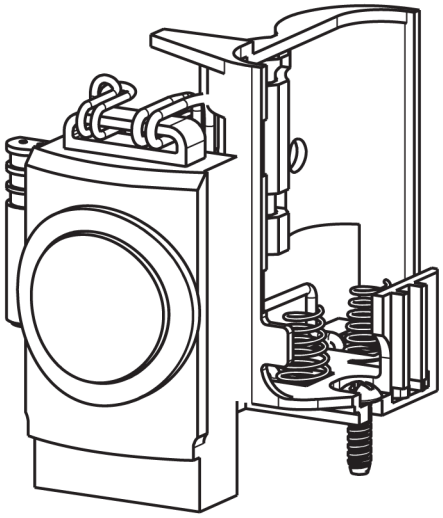

0.5 GPM (1.9 L/min) Vandal Proof Econo-Flo Non-Aerating Spray
E2805JKABCP

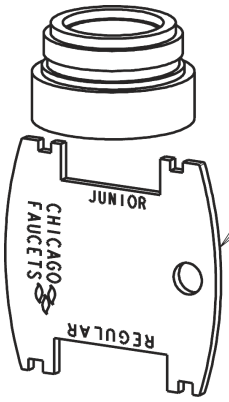

VANDAL PROOF KEY
3-024JKRCF

AC Power System
AC Power

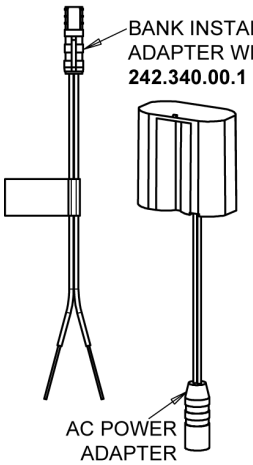

BANK INSTALLATION ADAPTER WIRE
242.340.00.1

AC POWER ADAPTER
240.747.00.1

For Technical Assistance:

Phone: 800-TEC-TRUE (832-8783)
Email: techsupport.us@chicagofaucets.com

2100 South Clearwater Drive
Des Plaines, IL 60018
Phone: 847-803-5000
chicagofaucets.com